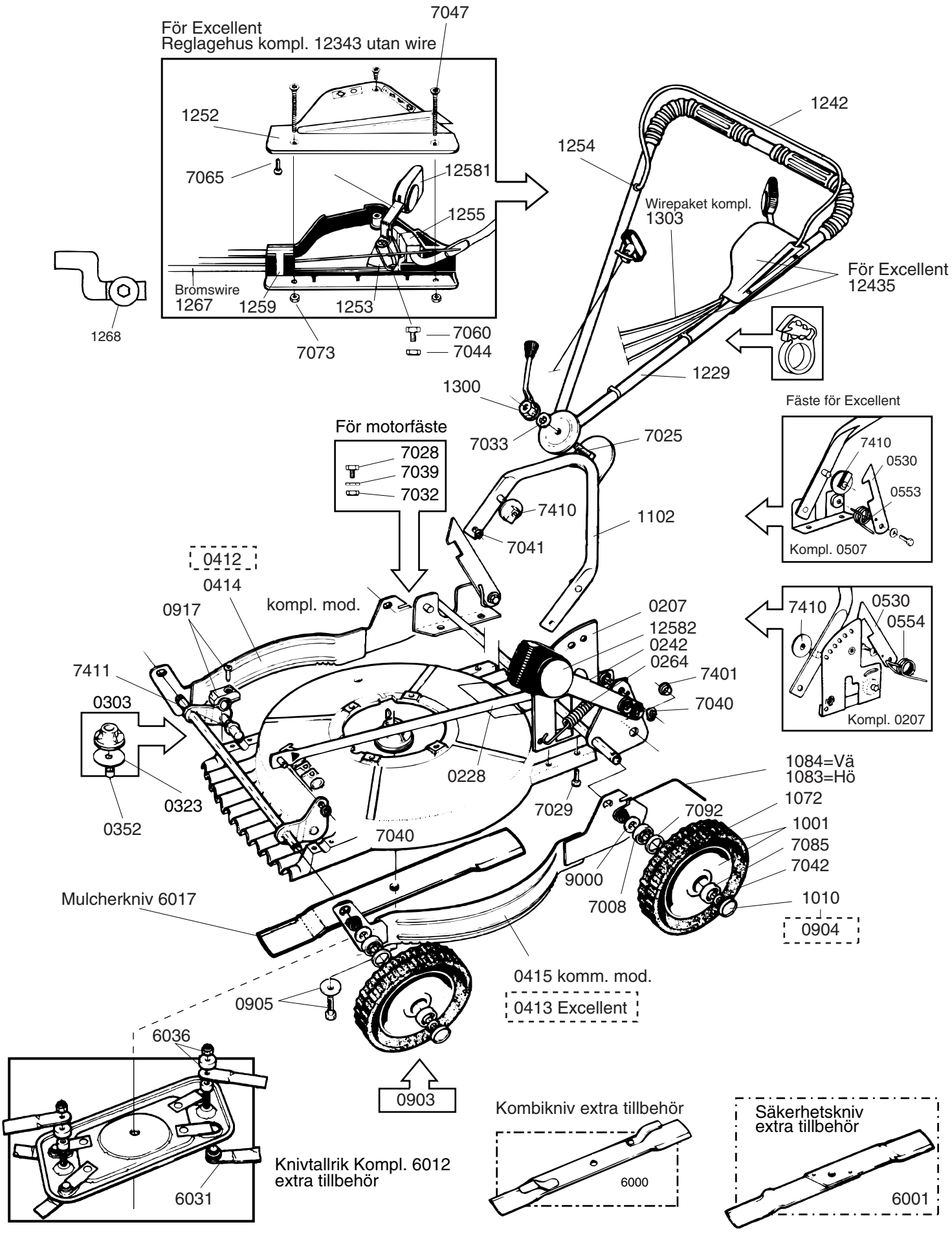Excellent, Pro 4 OHV