Excellent 2004

From. Serial no. HA100.000

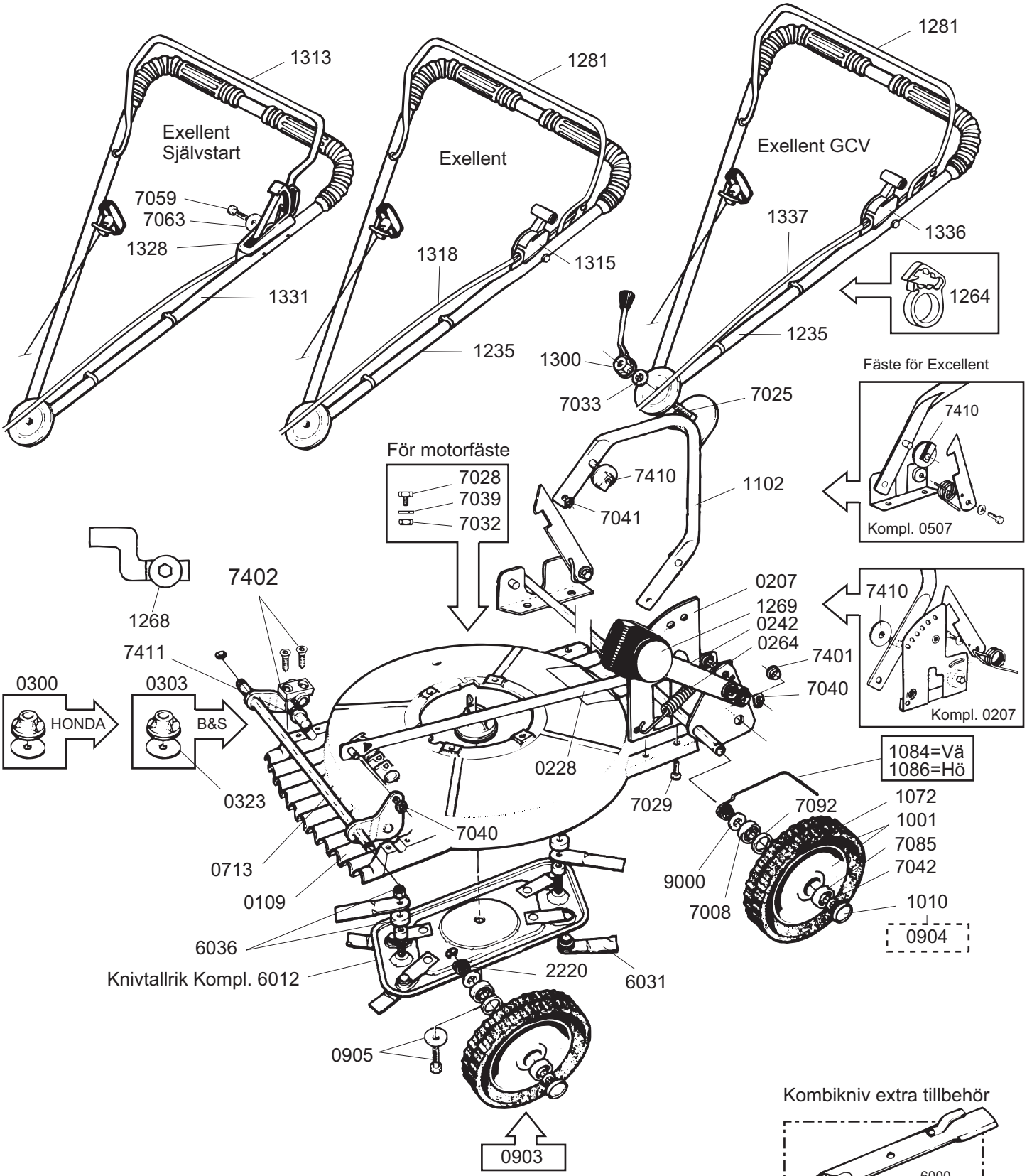

Motor:
B&S Quantum XLS 50, 12F8022037B1
B&S Quantum XLS 50 T&M, 12F8092038B1
HONDA GCV 135A2G9SD