MODEL:TWIN DRIVE REEL MOWER - FRAME ASSEMBLY

v3 Aug 09

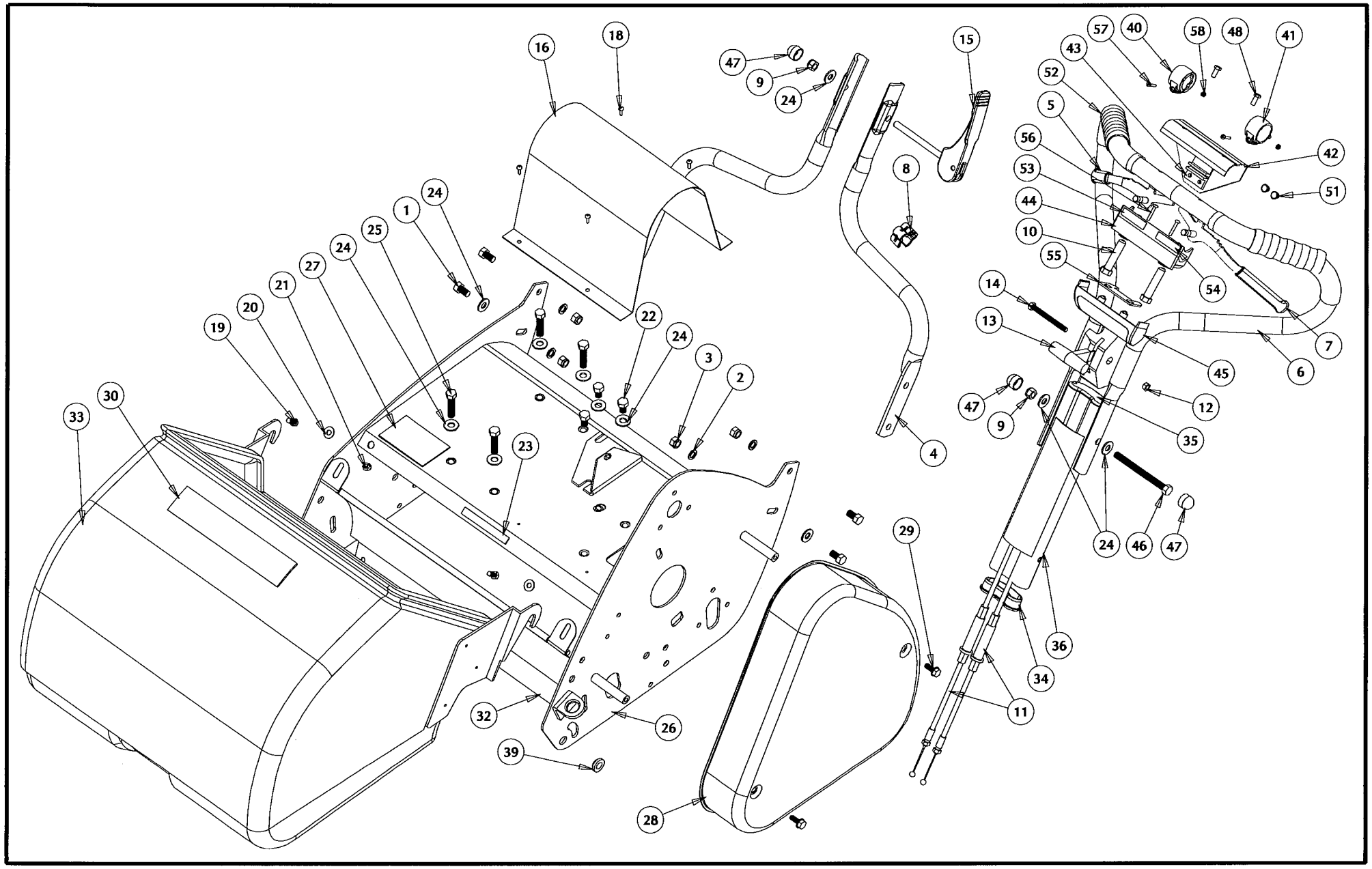

MODEL:TWIN DRIVE REEL MOWER - FRAME ASSEMBLY

v3 Aug 09

ITEM	DESCRIPTION	PART No
1	BOLT HT ZP M8X20 SET SCREW	FBOPL02
2	WASHER SPRING ZP M8	FWAPL58
3	NUT ZP M8	FNUPL08
4	HANDLE-LOWER 400 CHROME V2	L1450-165
4	HANDLE-LOWER 500 CHROME V2	L1550-165
4	HANDLE-LOWER 660 CHROME V2	L1650-165
5	LEVER-RH NO TEETH OVRMOULD V2	L1050-885
6	HANDLE-UPPER REEL CHROME V2	L1050-760
7	LEVER-LH NO TEETH OVRMOULD V2	L1050-865
8	CABLE RETAINER-THROTTLE CTRL	504150
9	NUT NYLOC ZP M8	FNLPL08
10	BOSS-PIVOT LEVER ZP 51.5MM '09	L1050-711z
11	CABLE-CLUTCH ASSY 1620MM (2.0)	L1050-701R
12	NUT NYLOC ZP M6	FNLPL06
13	THROTTLE CTRL 860MM T-BAR REEL	L1050-090
14	BOLT ZP M6X55 ENG	FBOPL13
15	LEVER-HANDLE LOCK ASSY 460/06	514005
16	COVER-SHAFT 400 SILVER	L1410-700S
16	COVER-SHAFT 400 PRIMARY GREEN	L1410-700G
16	COVER-SHAFT 400 RED	L1410-700R
16	COVER-SHAFT 400 RACING GREEN	L1410-700M
16	COVER-SHAFT 500/660 SILVER	L1510-700S
16	COVER-SHAFT 500/660 PRI GREEN	L1510-700G
16	COVER-SHAFT 500/660 RED	L1510-700R
16	COVER-SHAFT 500/660 RACING GRN	L1510-700M
18	SCREW ST SS PHD SQUA #6X1/2	FSCPL08
19	BOLT ZP M6X12 SET SCREW	FBOPL03
20	WASHER SPRING ZP M6	FWAPL56
21	NUT ZP M6	FNUPL06
22	BOLT HT ZP M8X16 SET SCREW	FBOPL18
23	DECAL-RAZOR CUT SYSTEM	L1070-234
24	WASHER FLAT ZP M8X19X1.6	FWAPL08
25	BOLT HT ZP M8X35 SET SCREW	FBOPL35
26	FRAME-400 W/A SILVER	L1405-710S
26	FRAME-400 W/A PRIMARY GREEN	L1405-710G
26	FRAME-400 W/A RED	L1405-710R
26	FRAME-400 W/A RACING GREEN	L1405-710M
26	FRAME-500 W/A SILVER	L1505-710S
26	FRAME-500 W/A PRIMARY GREEN	L1505-710G
26	FRAME-500 W/A RED	L1505-710R
26	FRAME-500 W/A RACING GREEN	L1505-710M
26	FRAME-660/C W/A SILVER	L1605-710S
26	FRAME-660/C W/A PRIMARY GREEN	L1605-710G
26	FRAME-660/C W/A RED	L1605-710R
26	FRAME-660/C W/A RACING GREEN	L1605-710M

ITEM	DESCRIPTION	PART No
27	DECAL-CAUTION REEL HANDS&FEET	L1070-230
28	GUARD-CHAIN SILVER	L1010-705S
28	GUARD-CHAIN PRIMARY GREEN	L1010-705G
28	GUARD-CHAIN RED	L1010-705R
28	GUARD-CHAIN RACING GREEN	L1010-705M
29	SCREW TAPTITE M6X16 HEX HD ZP	L0108-030
30	DECAL-GENERAL SAFETY	L1070-233
32	GRASS THROWER 400 SILVER	L1410-215
32	GRASS THROWER 400 PRI GREEN	L1410-220
32	GRASS THROWER 400 RED	L1410-195R
32	GRASS THROWER 400 RACING GREEN	L1410-205
32	GRASS THROWER 500 SILVER	L1510-215
32	GRASS THROWER 500 PRI GREEN	L1510-220
32	GRASS THROWER 500 RED	L1510-225
32	GRASS THROWER 500 RACING GREEN	L1510-205
32	GRASS THROWER 660 SILVER	L1610-195S
32	GRASS THROWER 660 PRI GREEN	L1610-195G
32	GRASS THROWER 660 RED	L1610-195R
32	GRASS THROWER 660 RACING GREEN	L1610-205
33	CATCHER 400 BLACK COMPLETE	L1465-260
33	CATCHER 500 BLACK COMPLETE	L1565-250
33	CATCHER ASSY 660 BLACK	L1665-200B
34	CAP-ELLIPTICAL HANDLE NO SLOTS	514025
35	CAP-ELLIPTICAL HANDLE SLOTTED	L1050-180
36	HANDLE-ELLIPTICAL 360MM CHROME	L1050-170
40	COLLAR-RH PLAIN V2/NYL	L1050-811
41	COLLAR-LH LATCH V2/NYL	L1050-816
42	COVER-REAR PLATE NZ BLK V2	L1050-785
43	INTERLOCK-LEVER PLASTIC	L1050-820
44	BASE-SP LEVER HOUSING V2	L1050-805
45	COVER-FRONT LEVER HOUSING V2	L1050-800
46	BOLT ZP M8X85 ENG	FBOPL82
47	COVER-NUT PE M8 BLK	L0135-034
48	SCREW TAPTITE M5X12 HEX HD ZP	L0108-027
51	RIVET AVEX 4.8MM 1.0-10.0	FRIPL06
52	GRIP-HANDLE PVC 340MM OVRMOULD	L1050-840
53	DECAL-SP DRIVE ON/OFF	L1070-201
54	DECAL-CUT SYSTEM ON/OFF	L1070-200
55	PLATE-PIVOT BOSS RETAIN BLACK	L1050-803B
56	SCREW ST ZP PHD POZI #6X20	FSCPL11
57	SCREW MC ZP PHD POZI M3X16	FSCPL16
58	NUT ZP M3	FNUPL03

MODEL:TWIN DRIVE REEL MOWER - DRIVE SYSTEM

v3 Aug 09

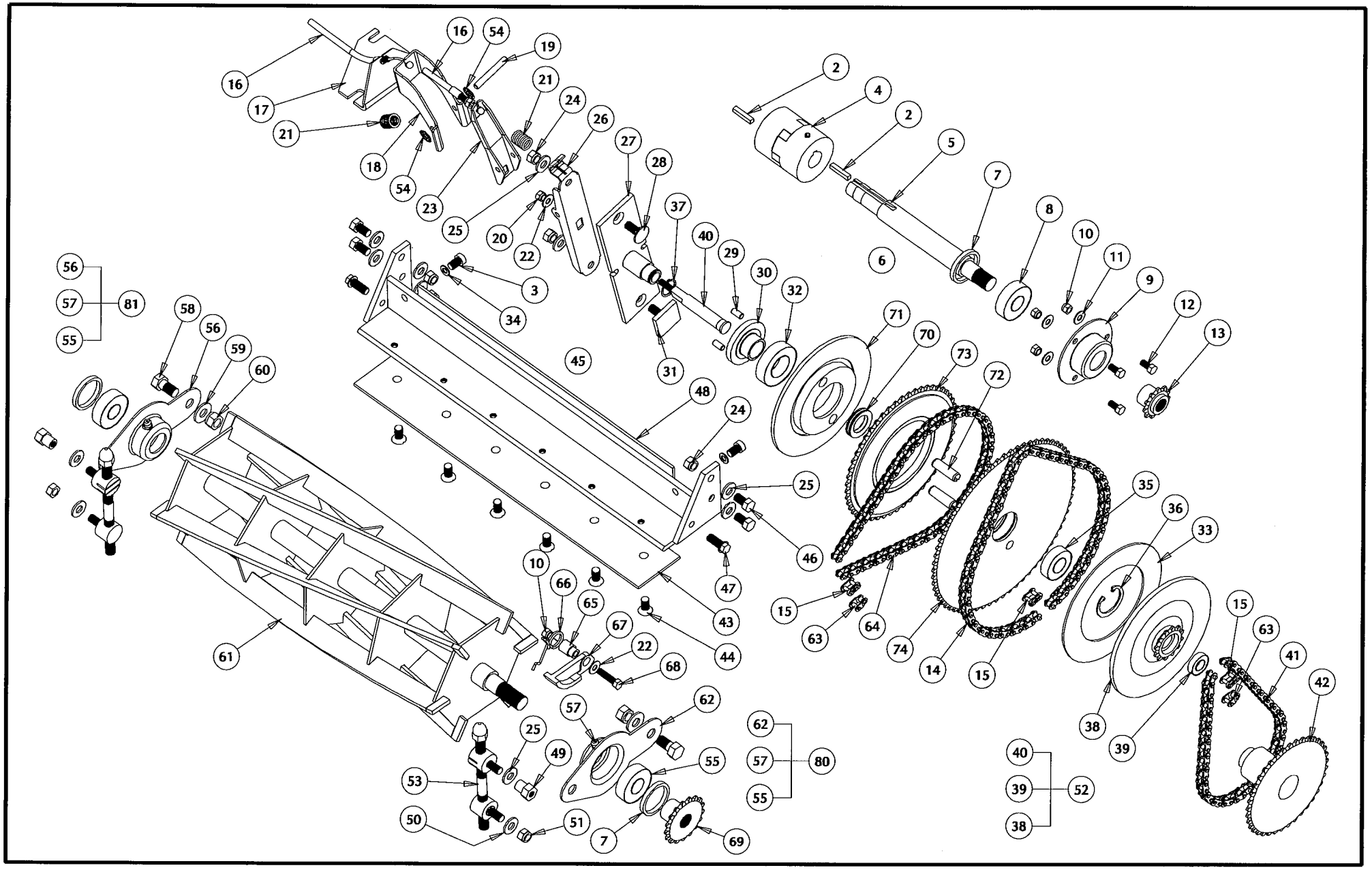

MODEL:TWIN DRIVE REEL MOWER - DRIVE SYSTEM

v3 Aug 09

ITEM	DESCRIPTION	PART No
2	KEY-CENT CLUTCH KEY 3/16X1	L1015-385
3	SCREW SKT HD T304 5/16X1/2 UNC	FSCPL55
4	COUPLING-INLINE 3/4" TYPE 095	L1015-700
4	COUPLING-INLINE 5/8" TYPE 095	L1015-705
5	BAR-DRIVE 400 3/4" BLACK	L1415-700B
5	BAR-DRIVE 400 5/8" BLACK	L1415-710B
5	BAR-DRIVE 500/660 3/4" BLACK	L1515-700B
5	BAR-DRIVE 500/660 5/8" BLACK	L1515-710B
6	BAR-DRIVE ASSY 400 3/4"	L1415-705
6	BAR-DRIVE ASSY 400 5/8"	L1415-715
6	BAR-DRIVE ASSY 500/660 3/4"	L1515-705
6	BAR-DRIVE ASSY 500/660 5/8"	L1515-715
7	SPACER BEARING PLASTIC HDPE	L1060-120
8	BEARING 6203-2RS	FBRL080
9	HOUSING BEARING ROUND BLACK	L1060-145
10	NUT ZP M6	FNUPL06
11	WASHER SPRING ZP M6	FWAPL56
12	BOLT HT ZP M6X16 SET SCREW	FBOPL01
13	SPROCKET-MOTOR 10T	L1020-741
14	CHAIN-3/8"35-1 72P ENDLESS	L1025-725
15	CHAIN CONN LINK 3/8 ANSI 35	L1025-490
16	CABLE-CLUTCH ASSY 1305MM V1	L1050-700
17	BRACKET-CABLE RETAIN W/A BLACK	L1020-785B
18	BRACKET-CLUTCH REEL ZP	L1020-710Z
19	PIN-6 X 45 LONG ZP	L1020-770Z
20	NUT NYLOC ZP M6	FNLPL06
21	SPRING CLUTCH ZP	L1220-395
22	WASHER FLAT ZP M6X16X1.2	FWAPL06
23	LEVER-CLUTCH ROLLER ZP	L1020-700Z
24	NUT ZP M8	FNUPL08
25	WASHER SPRING ZP M8	FWAPL58
26	BRACKET-CLUTCH ROLLER ZP	L1020-705Z
27	PLATE-CLUTCH MOUNT W/A	L1020-720
28	BOLT ZP M8X20 CUP HD	FBOPL21
29	PIN-CLUTCH THRUST	L1020-726
30	BLOCK-CLUTCH THRUST	L1020-725
31	PLATE-CLAMP CLUTCH ASSY	L1020-765
32	BEARING 6005-2RS	FBRL130
33	LINING-CLUTCH 140X90X2.0MM	L1020-760
34	WASHER FLAT SS M8X19X1.6	FWAPL09
35	BEARING 6003-2RS	FBRL120
36	CIRCLIP-INTERNAL 35MM	L0135-064
37	CIRCLIP-EXTERNAL 17MM	L0135-063
38	PLATE-CLUTCH ROLLER W/A	L1020-730
39	BEARING 6901-2RS	FBRL110
40	BAR-CLUTCH CONTROL	L1020-715
41	CHAIN-3/8"35-1 53P ENDLESS	L1025-716
42	SPROCKET-ROLLER 39T WA	L1020-753
43	BLADE BOTTOM-400 FLAT	L1440-295
43	BLADE BOTTOM-500 FLAT	L1540-295
43	BLADE BOTTOM-660 FLAT	L1640-295
43	BLADE BOTTOM GOLF SHAVER	L1740-295
44	SCREW MC ZP CSK SLT 5/16X1/2	FSCPL41
45	BLADE BOTTOM ASSY-400 FLAT	L1440-460
45	BLADE BOTTOM ASSY-500 FLAT	L1540-460
45	BLADE BOTTOM ASSY-660 FLAT	L1640-460
45	BLADE BOTTOM ASSY-GOLF SHAVER	L1740-450
46	BOLT HT ZP M8X20 SET SCREW	FBOPL02
47	SCREW TAPTITE M8X20 HEX HD ZP	L0108-039
48	CARRIER ASSY-BOTTOM BLADE 400	L1440-390
48	CARRIER ASSY-BOTTOM BLADE 500	L1540-390
48	CARRIER ASSY-BOTTOM BLADE 660	L1640-390
49	STUD CATCHER ZP	L1035-240
50	WASHER FLAT ZP M8X19X1.6	FWAPL08
51	NUT NYLOC ZP M8	FNLPL08
52	CLUTCH & BEARING ASSY	L1020-731
53	ADJ ASSY REEL SQUEEZED	L1035-290
54	WASHER STARLOCK M6 PUSHON FIX	L0135-015
55	BEARING 6203 Z	FBRL070
56	HOUSING REEL BEARING RH BLACK	L1035-215
57	NIPPLE GREASE 1/4 SAE STRAIGHT	L1060-110
58	BOLT REEL ADJ PIVOT ZP	L1035-230
59	WASHER REEL BRG HSNG 3/8 ZP	L1035-200
60	NUT NYLOC ZP 3/8 UNF	FNLPL45
61	REEL ASSY COMPL 400 6 BLADE	L1435-400
61	REEL ASSY COMPL 500 6 BLADE	L1535-400
61	REEL ASSY COMPL 660 6 BLADE	L1635-400
61	REEL ASSY COMPL GOLF 10 BLADE	L1735-400
61	REEL ASSY COMPL 660 10 BLADE	L1135-400
62	HOUSING REEL BEARING LH BLACK	L1035-205
63	CHAIN CRANK LINK 3/8 ANSI 35	L1025-480
64	CHAIN-3/8"35-1 67P ENDLESS	L1025-720
65	BOSS-CHAIN TENSION	L1025-700
66	SPRING-TORSION REEL	L1025-705
67	SHOE-CHAIN TENSION	L1025-710
68	BOLT ZP M6X30 SET SCREW	FBOPL09
69	SPROCKET-REEL 17T	L1020-755
70	SPRING-DISC (BISSELL)	L1020-762
71	PLATE-DRIVE	L1020-810
72	ROLL PIN M10X30	L1020-739
73	SPROCKET-51T COMPLETE	L1020-744
74	SPROCKET-CLUTCH 66 TEETH 2002	L1020-800
80	HOUSING REEL BRNG LH ASSY+BRG	L1035-210
81	HOUSING REEL BRNG RH ASSY+BRG	L1035-220

lawnMaster

MODEL: TWIN DRIVE REEL MOWER - ROLLER ASSEMBLY

v3 Aug 09

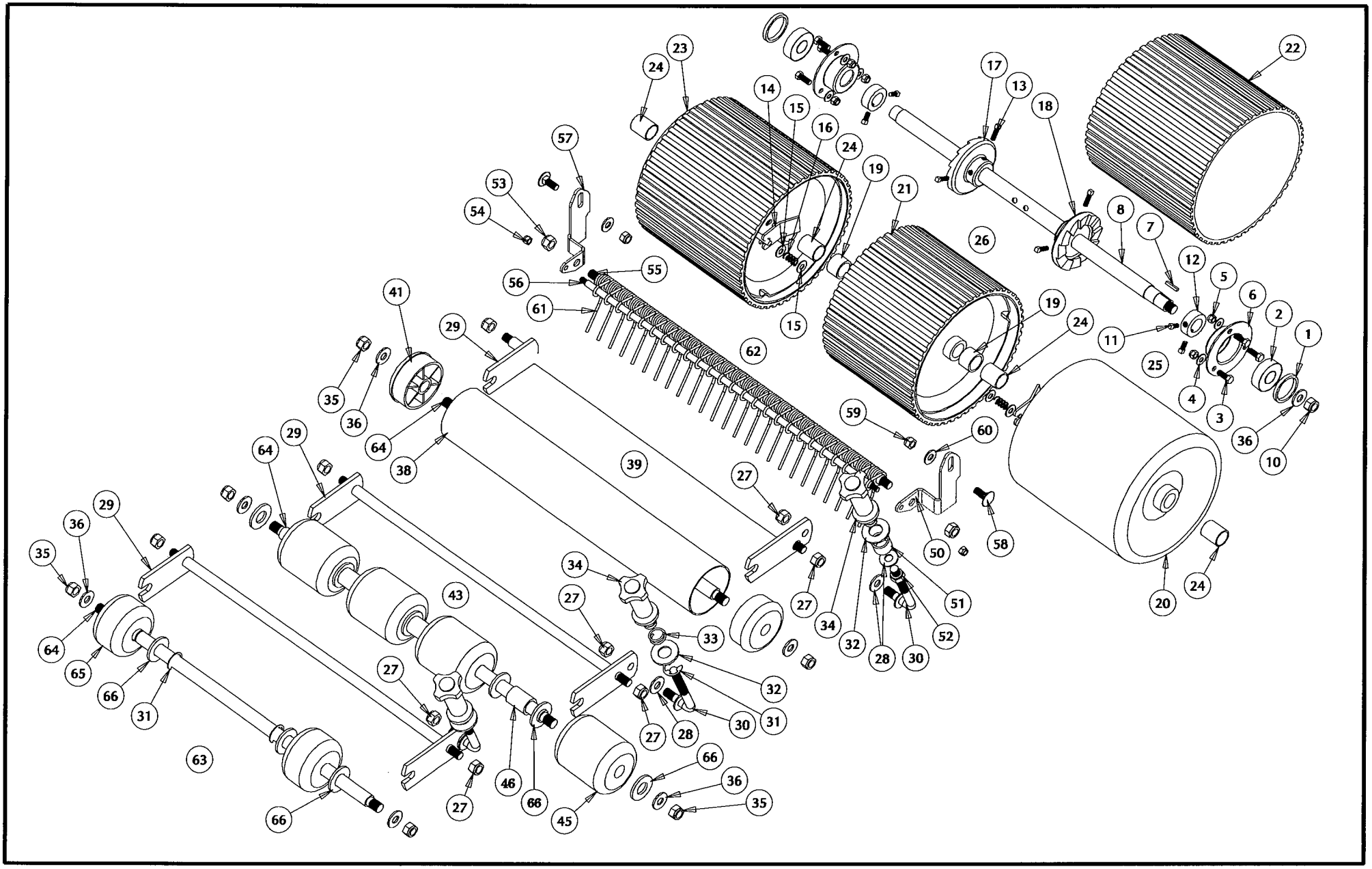

MODEL:TWIN DRIVE REEL MOWER - ROLLER ASSEMBLY

v3 Aug 09

ITEM	DESCRIPTION	PART No
1	SPACER BEARING PLASTIC HDPE	L1060-120
2	BEARING 6203-2RS	FBRL080
2	BEARING 6203 Z	FBRL070
3	BOLT HT ZP M6X16 SET SCREW	FBOPL01
4	WASHER SPRING ZP M6	FWAPL56
5	NUT ZP M6	FNUPL06
6	HOUSING BEARING ROUND BLACK	L1060-145
7	KEY-BACK ROLLER DRIVE 1/8X3/8	L1030-170
8	SHAFT-BACK ROLLER DRILLED 400	L1430-350
8	SHAFT-BACK ROLLER DRILLED 500	L1530-350
8	SHAFT-BACK ROLLER DRILLED 660	L1630-350
10	NUT ZP HALF M12	L0110-013
11	SCREW SQHD CUP POINT 5/16X5/8	L0107-041
12	COLLAR LOCKING BACK ROLLER ZP	L1030-230
13	SCREW SQHD CUP POINT 5/16X5/8	L0107-041
14	PAWL ASSY-BACK ROLLER H/TREAT	L1030-290
15	WASHER FLAT ZP 1/4X5/8X18G	L0115-040
16	SPRING-BACK ROLLER PAWL	L1030-270
17	RATCHET BACK ROLLER RH COMPL	L1030-250
18	RATCHET BACK ROLLER LH COMPL	L1030-245
19	TUBE-BACK ROLLER 660 SPACING	L1630-200
20	DRUM BR ASSY 400 BLACK	L1430-330
20	DRUM BR ASSY GOLF BLACK	L1730-330
20	DRUM BR ASSY 500/660 BLACK	L1530-330
21	DRUM CENTRE BR ASSY 660 BLACK	L1630-305
22	SLEEVE RUBBER BACK ROLLER	L1230-180
23	DRUM ASSY 400 RUBBER B/R	L1230-302
23	DRUM ASSY 500/660 RUBBER B/R	L1230-320
23	DRUM ASSY 660 CTR RUBBER B/R	L1230-305
24	BUSH-BACK ROLLER GOLF BRONZE	L1730-190
25	ROLLER BACK ASSY+BRGS 400	L1430-450
25	ROLLER BACK ASSY+BRGS 500	L1530-450
25	ROLLER BACK ASSY+BRGS 660	L1630-450
25	ROLLER BACK ASSY+BRGS GOLF	L1730-450
26	ROLLER BACK ASSY RUBBER 400	L1230-360
26	ROLLER BACK ASSY RUBBER 500	L1230-395
26	ROLLER BACK ASSY RUBBER 660	L1230-400
27	NUT NYLOC ZP M10	FNLPL10
28	WASHER FLAT ZP M10X21X1.6	FWAPL10
29	BRKT-FRONT ROLLER WA 500 ZP V2	L1545-310
29	BRKT-FRONT ROLLER WA 400 ZP V2	L1445-310
29	BRKT-FRONT ROLLER WA 660 ZP V2	L1645-310
30	STUD FRONT ROLLER ADJ CHROME	L1045-230
31	E CLIP 5/8	L0135-025
32	WASHER FLAT ZP M16X25X1.6	L0115-016

ITEM	DESCRIPTION	PART No
33	SPRING FRONT ROLLER ADJUSTER	L1045-220
34	HANDWHEEL FRONT ROLLER ADJ	L1045-240
35	NUT NYLOC ZP M12	FNLPL12
36	WASHER FLAT ZP 1/2X1-1/8X16G	FWAPL28
38	TUBE-RLR FRONT STEEL 400 ZP V2	L1445-408z
38	TUBE-RLR FRONT STEEL 500 ZP V2	L1545-408z
38	TUBE-RLR FRONT STEEL 660 ZP V2	L1645-408z
39	ROLLER FRONT ASSY-400 STEEL V2	L1445-425
39	ROLLER FRONT ASSY-500 STEEL V2	L1545-425
39	ROLLER FRONT ASSY-660 STEEL V2	L1645-425
41	CAP-END STEEL FRONT ROLLER	L1045-315
43	ROLLER FRONT ASSY-400 WOOD V2	L1445-430
43	ROLLER FRONT ASSY-500 WOOD V2	L1545-430
43	ROLLER FRONT ASSY-660 WOOD V2	L1645-430
45	ROLLER WOOD 82MM STAINED	L1045-390
46	SPACER-FRNT ROLLER 400 744480B	L1445-385
46	SPACER-FRNT ROLLER 500 744440B	L1545-385
46	SPACER-FRNT ROLLER 660 741600B	L1645-385
50	BRACKET-TURF RAKE LH ZP V2	L1745-107z
51	SPACER-HANDWHEEL ROLLER ZP	L1745-215
52	NUT ZP M10	FNUPL10
53	NUT NYLOC ZP THIN 3/8 UNF	L0111-046
54	NUT NYLOC ZP M6	FNLPL06
55	SHAFT TURF RAKE 1/2 660 ZP	L1145-130
55	SHAFT TURF RAKE 1/2 GOLF ZP	L1745-130
56	SHAFT TURF RAKE 5/16 660 ZP	L1145-140
56	SHAFT TURF RAKE 5/16 GOLF ZP	L1745-140
57	BRACKET-TURF RAKE RH ZP V2	L1745-108z
58	BOLT ZP M8X20 CUP HD	FBOPL21
59	NUT NYLOC ZP M8	FNLPL08
60	WASHER FLAT ZP M8X19X1.6	FWAPL08
61	TINE-TURF RAKE	L1745-120
62	TURF RAKE ASSY 660 V2	L1645-150
62	TURF RAKE ASSY 500 V2	L1545-150
63	ROLLER FRONT ASSY-400 EU KIT	L1445-305
63	ROLLER FRONT ASSY-500 EU KIT	L1545-305
63	ROLLER FRONT ASSY-660 EU KIT	L1645-305
64	SHAFT-FRONT ROLLER 400 ZP	L1445-395
64	SHAFT-FRONT ROLLER 500 ZP	L1545-395
64	SHAFT-FRONT ROLLER 660 ZP	L1645-395
65	ROLLER WOOD 45MM STAINED	L1045-385
66	WASHER FLAT ZP M16X34X2.5	L0115-056